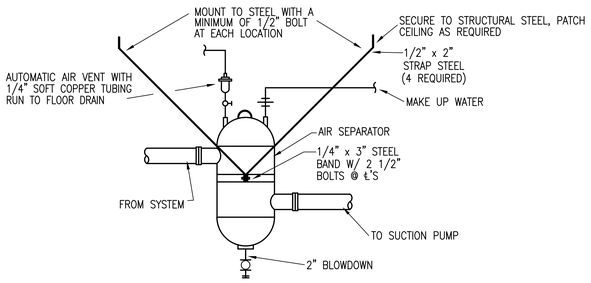

AIR SEPARATOR DETAIL

NOT TO SCALE

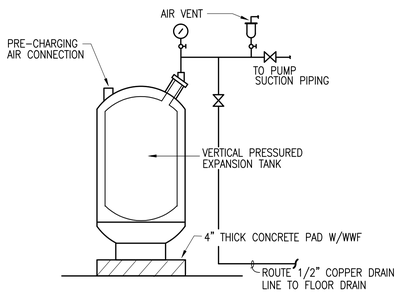

EXPANSION TANK DETAIL

NOT TO SCALE

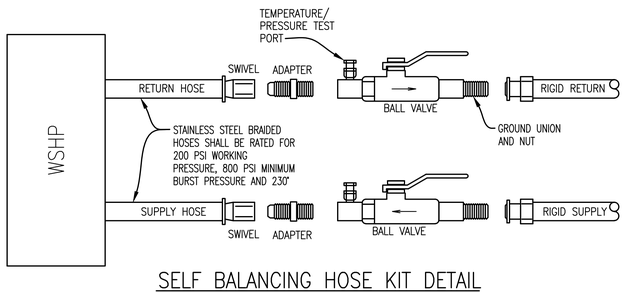

SELF BALANCING HOSE KIT DETAIL

N.T.S.

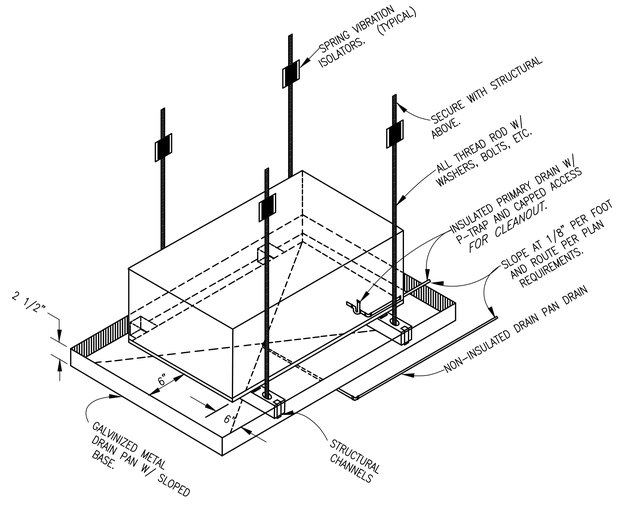

TYPICAL HORIZONTAL ERV DETAIL

NOT TO SCALE

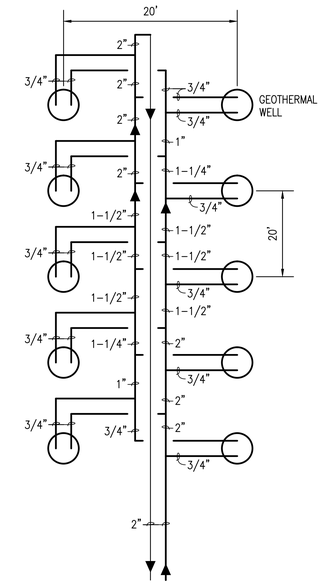

ZONE LOOP DETAIL

NOT TO SCALE:

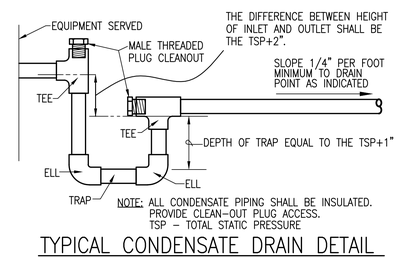

TYPICAL CONDENSATE DRAIN DETAIL DRAW THROUGH UNIT

NOT TO SCALE

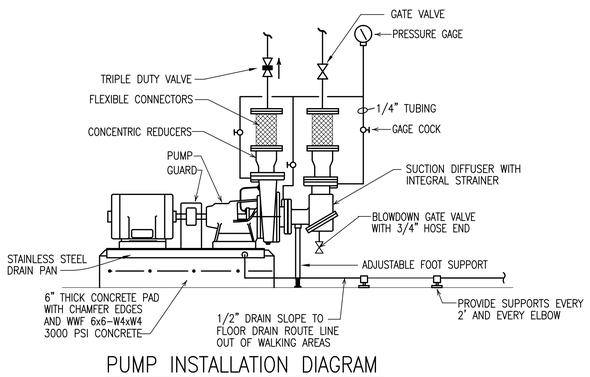

PUMP INSTALLATION DIAGRAM

N.T.S.

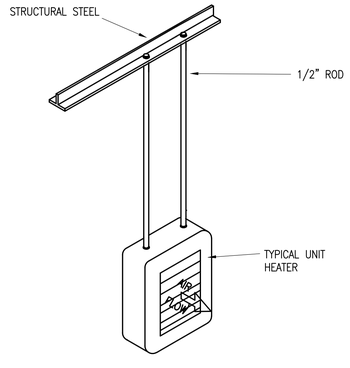

TYPICAL UNIT HEATER DETAIL

NOT TO SCALE

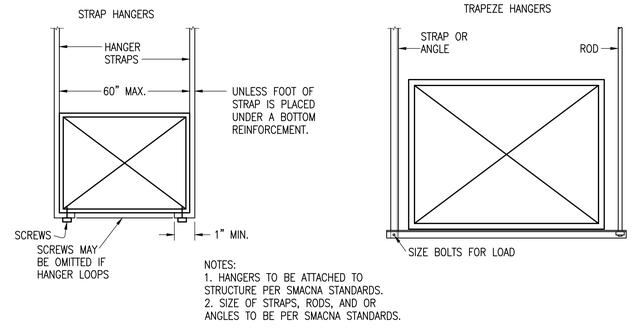

NOTES:
1. HANGERS TO BE ATTACHED TO STRUCTURE PER SMACNA STANDARDS.
2. SIZE OF STRAPS, RODS, AND OR ANGLES TO BE PER SMACNA STANDARDS.

DUCT HANGER DETAILS

NO SCALE

baydesign
ARCHITECTURE
architecture + sustainability
720 bayfront parkway
suite 200
pensacola, fl 32502
t: 850.432.0706
f: 850.433.0508
baydesign.com

SEAL

PETERSON ENGINEERING INC.
(PROF. ENG. # 3600)
75 SOUTH "F" STREET
PENSACOLA, FLORIDA 32501
(850) 434-0513
PE 201090

bay design associates architects, pl
florida certificate of authorization AA0003597

PROJECT:
Gulf Breeze Community Center
800 Shoreline Drive
Gulf Breeze, Fl 32561

SHEET TITLE:
MECHANICAL DETAILS

PROJECT NO: 2413
FILE NO:
DATE: 06.01.2011
REVISION:
1 ADDENDUM #1 06/06/2011
2 ADDENDUM #2 06/20/2011

SHEET
M501